Patented Apr. 13, 1926. **Des. 69,927**

UNITED STATES PATENT OFFICE.

CLARENCE A. WETZELL, OF STERLING, ILLINOIS.

DESIGN FOR A TOY.

Application filed September 4, 1925. Serial No. 14,707. Term of patent 3½ years.

To all whom it may concern:

Be it known that I, CLARENCE A. WETZELL, a citizen of the United States, residing at Sterling, in the county of Whiteside and State of Illinois, have invented a new, original, and ornamental Design for a Toy, of which the following is a specification, reference being had to the accompanying drawing, forming a part thereof.

Figure 1 is plan view of a toy, showing my new design.

Figure 2 is a side elevation of said toy.

I claim:

The ornamental design for a toy, as shown.

CLARENCE A. WETZELL.

April 13, 1926. Des. 69,927

C. A. WETZELL

TOY

Filed Sept. 4, 1925

Fig. 1

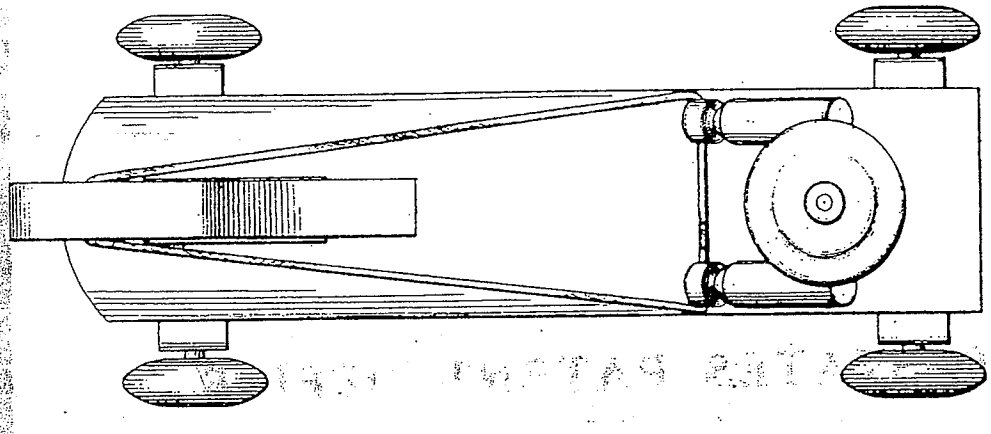

Fig. 2

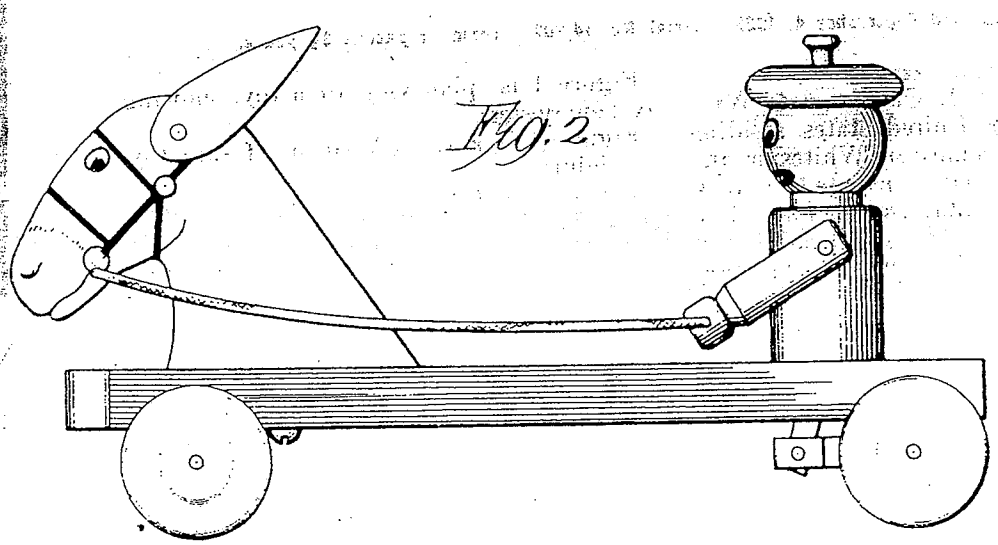

Inventor:
Clarence A. Wetzell
By Arthur F. Durand
Atty.

Patented June 1, 1926. 1,586,870

UNITED STATES PATENT OFFICE.

CLARENCE A. WETZELL, OF STERLING, ILLINOIS.

MECHANICAL TOY.

Application filed September 4, 1925. Serial No. 54,410.

This invention relates to mechanical toys, and more particularly to those which are adapted to be pulled along the floor, and which have means operated by one or more of the wheels of the toys.

Generally stated, the object of the invention is to provide a novel and improved construction, whereby the toy, when pulled or moved along the floor, has the appearance of a person driving a donkey or other animal, having arms which are operated up and down by one or more of the wheels of the toy, and which are connected by reins to the head of the donkey or other animal.

It is also an object to provide certain details and features of construction tending to increase the general efficiency and desirability of a mechanical toy of this particular character.

To these and other useful ends, the invention consists in the matters hereinafter set forth and claimed, and as shown in the accompanying drawings, in which—

Figure 1 is a side elevation, partially in longitudinal vertical section, of a mechanical toy embodying the principles of the invention, and

Figure 2 is a plan of the said toy.

As thus illustrated, the invention comprises a base 1, mounted upon wheels 2, through the medium of metal bolsters 3 and axles 4 and 5, which bolsters are secured to the under side of the base by screws 6, or other suitable means. The toy figure at the rear of the toy comprises a cylindrical torso 7, which is inserted in an opening 8 in the base 1, previously mentioned. The head 9 has a neck portion 10, which is inserted tightly in the upper portion of said body or torso. A rock shaft 11 is inserted transversely through said body 7, and is provided at each end thereof with arms 12, of any suitable character, but preferably formed from turned pieces of wood. The rock shaft 11 has an arm 13 mounted thereon, within the torso 7, and a lever 14 is mounted on a transverse pin 15 inserted horizontally through the torso 7, transversely of the toy. The upper end of the lever 14 is suitably connected with the end of the arm 13, so that vibration of this lever will rock the shaft 11, in the manner indicated in dotted lines in Figure 1 of the drawings. The lower end of the lever 14 is connected by a pitman 16 with the crank 17 on the axle 5, to which latter the rear wheels 2 are secured, or at least one of them, so that the wheel or wheels will rotate the crank axle, and thereby operate the lever 14 and cause the arms 12 to swing up and down.

The forward portion of the toy has the head 18 of a donkey, or other animal, mounted thereon, and this head is connected by reins 19 with the hands of the arms 12, so that when the toy is pulled along the floor, by the pull cord 20 attached to the head of the donkey, the little figure will appear to be driving the donkey, or other animal.

Practically all of the parts are preferably made of wood, with the exception of the bolsters and axles and the elements 11, 13, 14 and 15, as these mechanical parts are preferably of metal. The reins 19 may be a cord or any flexible material suitable for this purpose, and the ears of the donkey, or other animal, may be of leather or other flexible material so that they will vibrate when the toy is pulled along the floor.

The head 9 with the hat thereon can be of one turned piece of wood, or the head can be made separate of one piece, and the hat can be made of another piece and suitably fastened to the top of the head.

Thus the animal head 18 and the figure 7 are rigidly connected together through the wheeled base, and only the arms and reins of the said head and figure are movable relatively to the wheeled base, and the actuating mechanism or means is practically concealed from view. Also, by using a cylindrical torso 7 it can be inserted like a plug in the base 1, and it does not matter which side of the cylinder is used as the front portion, as all sides are alike. Also, the spherical head 9 can be used with any side thereof as the face, and is simply inserted like a plug in the top of the torso 7, to form a closure for the top of the chamber in which the actuating means are concealed.

Without disclaiming anything, and without prejudice to any novelty disclosed, what I claim as my invention is:

1. In a mechanical toy, the combination of a base having one or more supporting wheels therefor, an animal head on the front portion of said base, rigid therewith, a toy figure rigid with the rear portion of said base, having movable arms, wheel operated means concealed in the body of the figure for actuating said arms up and down,

June 1, 1926.

C. A. WETZELL

1,586,870

MECHANICAL TOY

Filed Sept. 4, 1925

Fig. 1

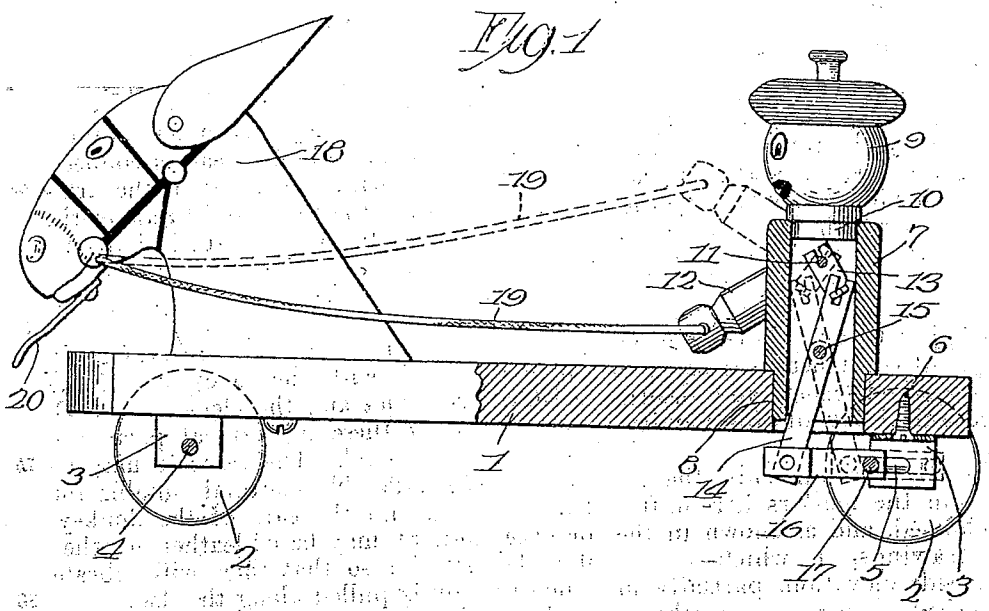

Fig. 2

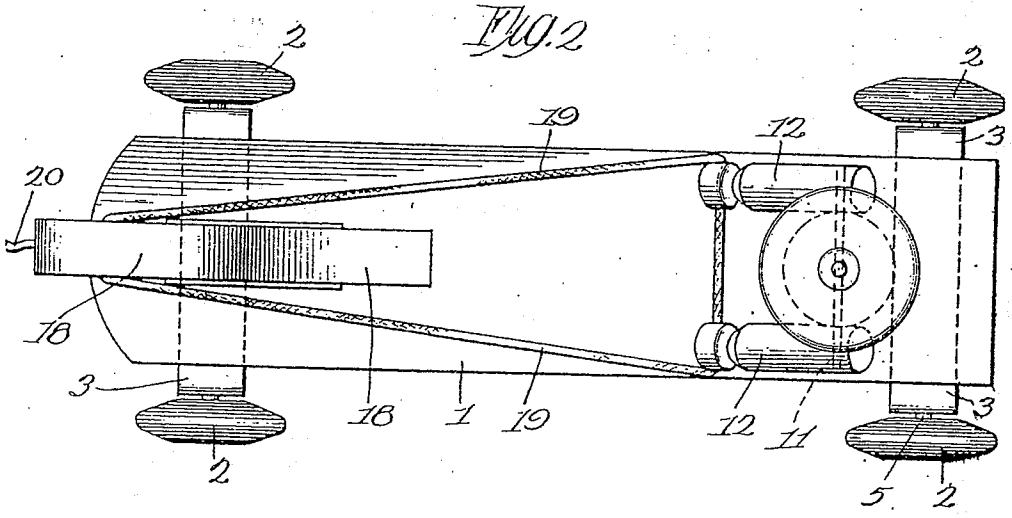

Inventor:
Clarence A. Wetzell
By Arthur H. Durand
Atty.

and reins connecting said arms to said head, actuated by the arms, so that the animal head and said figure are rigidly connected together by said wheeled base, and only the arms and reins thereof have motion relatively to said base.

2. A structure as specified in claim 1, said toy figure comprising a torso inserted rigidly in said base and having a transverse rock shaft in the upper portion thereof, said arms being fixed on the end portions of said rock shaft, and said arm operating means extending upwardly in said torso and being pivoted therein to actuate said rock shaft.

3. A structure as specified in claim 1, said toy figure comprising a hollow torso inserted in said base, and said arm actuating means comprising a crank axle, and means enclosed in said torso and pivoted therein to connect said crank axle to said arms.

4. A structure as specified in claim 1, said toy figure comprising a cylindrical hollow torso inserted in said base, and a turned head inserted in the upper end of said torso, forming a plug-like closure for the top of the hollow torso, said arm actuating means being enclosed by said torso.

5. A structure as specified in claim 1, said arms being rigidly connected with each other by their common pivot and connected together also by said reins, the arm actuating means engaging the rigid connection midway between the arms.

Specification signed this 28th day of Aug. 1925.

CLARENCE A. WETZELL.

June 8, 1926.

C. A. WETZELL

1,587,883

MECHANICAL TOY

Filed April 23. 1923

Fig. 1

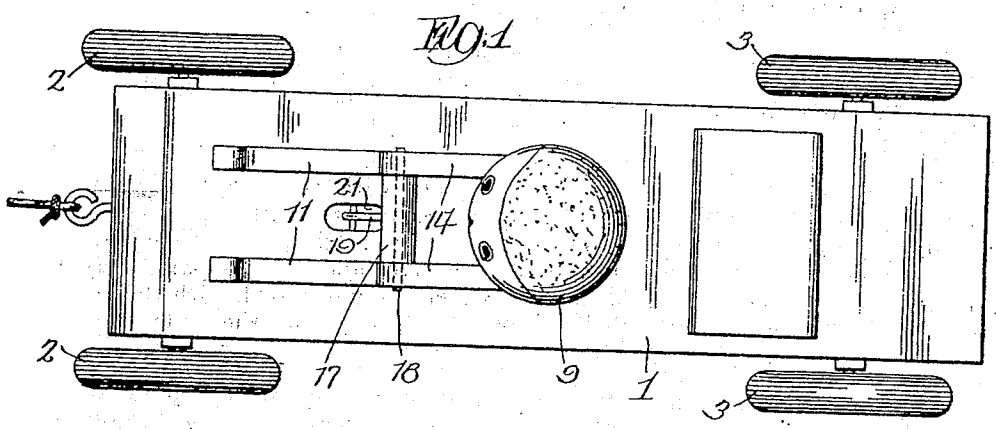

Fig. 2

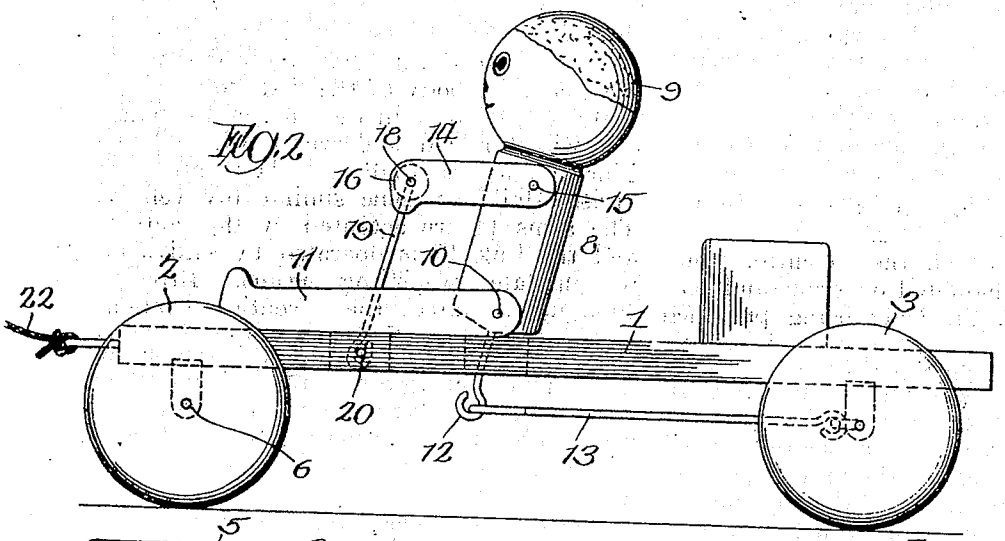

Fig. 3

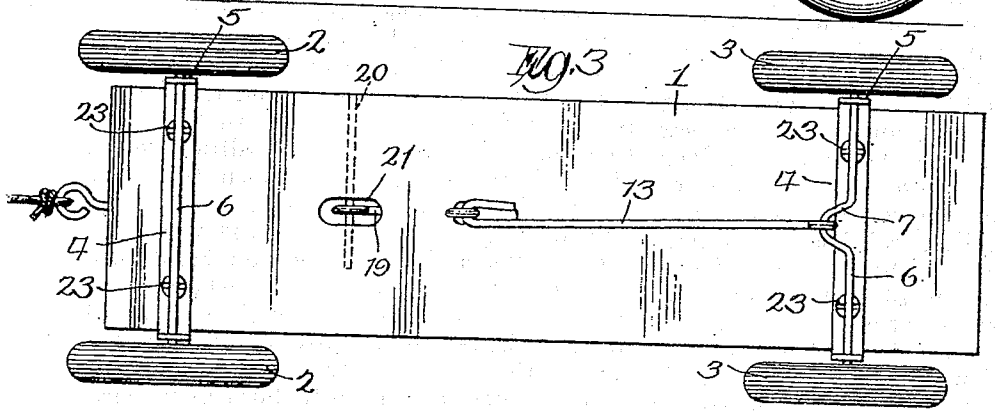

Inventor.

Clarence A. Wetzell

by Arthur H. Durand Atty.

Patented June 8, 1926.

1,587,883

UNITED STATES PATENT OFFICE.

CLARENCE A. WETZELL, OF STERLING, ILLINOIS.

MECHANICAL TOY.

Application filed April 23, 1923. Serial No. 633,916.

This invention relates to mechanical toys of the kind which are adapted to be propelled or moved along the floor to produce the desired mechanical effect.

Generally stated, the object of the invention is to provide a simple and comparatively inexpensive mechanical toy having a figure thereon which appears to be propelling the toy when it is drawn along the floor.

It is also an object to provide certain details and features of construction and combinations tending to increase the general efficiency and the desirability of a mechanical toy of this particular character.

To the foregoing and other useful ends the invention consists in matters hereinafter set forth and claimed and shown in the accompanying drawings in which—

Figure 1 is a plan of a mechanical toy embodying the principles of the invention.

Figure 2 is a side elevation of said toy.

Figure 3 is a bottom view of the toy shown in Figures 1 and 2.

As thus illustrated, the invention comprises a body 1 mounted on front and rear wheels 2 and 3, the body being provided with transverse metal bolsters 4 having down-turned end portions 5 which engage the rotary axles 6 to which said wheels are attached. It will be seen that the rear axle 6 has a crank 7 formed in the middle portion thereof. Near the front of the toy, on the flat body 1, there is mounted a figure comprising the cylindrical portion 8 provided with a round head 9, and the lower end portion of the body 8 of the figure being pivoted at 10 between and upon the rear end portions of the legs 11 which are fixed in outstretched position upon the top of the flat body 1 of the vehicle. The lower portion of the cylindrical body 8 is provided with a depending hook 12 to which is connected the pitman 13 that engages the crank 7 previously mentioned. The figure is provided with arms 14 which are pivoted thereon at 15 and which have between their outer ends or hands 16 a transverse spacer 17 which is pivoted thereon by a pin 18 extending from one hand to the other. A link 19 connects the spacer 17 with a pivotal point 20 in the slot 21 cut in the body 1, the pivot 20 being formed by any suitable means for this purpose.

Now the toy thus constructed has the appearance of being a vehicle which is propelled by the figure when the toy is drawn along the floor. The front end of the toy may have a string 22 attached thereto for this purpose. The crank 7 through the pitman 13 rocks the figure about its pivot 10, and when this is done the arms 14 have a swinging motion, with the result that the figure appears to be propelling the toy.

The construction is simple and comparatively inexpensive, and all the parts may be made inexpensively of wood, with the exception of the pivots and the axles and the pitman 13 and the link 19 and the hook 12, these parts being preferably made of wire. Also, the bolsters 4 are preferably made of metal strips and are secured in place by screws 23 inserted through the bolsters and into the flat board 1 which forms the chassis or body of the little toy vehicle.

When the toy is in use, the figure swings or rocks forward and backward, and the general effect is that of a boy riding an "Irish Mail" or some similar toy vehicle. The arms 14 are actuated by the body 8, and the link 19 is operated by said arms to simulate propelling means. Broadly, though, as stated, the invention contemplates a mechanical toy comprising a vehicle and a toy figure thereon which when the vehicle is drawn along the floor, appears to be operating the wheels, or at least one of them, to propel the vehicle in the desired manner.

The link 19, therefore, simulates a propelling device, and this propelling device is actuated by the arms 14, and the arms 14 are actuated by the body 8, and the body 8 is actuated by wheel power. In this way, therefore, the simulated propelling device 19 is simply connected between the arms 14 and the wheeled support 1, and is in no way directly connected with the wheels of the vehicle, and hence the simulated propelling device 19 is actuated by wheel power communicated thereto through the wheel actuated body 8 of the toy figure. The toy figure, therefore, really operates the simulated propelling device 19, but this is merely a dummy device, and this device neither propels the vehicle nor is it directly actuated by the wheels of the vehicle, but to the contrary this simulated propelling device 19 is actuated by the toy figure itself.

Thus it will be seen that the support 1 is simply a flat horizontal member, and that the legs 7 are straight and are stretched out straight ahead and are mounted flat-

wise on the top of said support. As the body 8 is round, and therefore of similar thickness, space is afforded between the arms 14 for the transverse bar 17, which latter simulates the upper cross-piece of an ordinary handle, so that the elements 17 and 19 simulate more effectively the ordinary propelling device of a vehicle. The invention contemplates, therefore, broadly, a simulated propelling device which is actually operated by the toy figure, and which is very obviously so operated, thereby to more nearly approximate the actual conditions of propulsion by the person sitting on a vehicle and actually driving the vehicle by means of a hand lever provided for that purpose.

As another advantage of the specific construction of the toy figure, as shown and described, it will be seen that the torso 8 is cylindrical, while the head 9 is spherical, whereby these parts can be very easily manufactured. Furthermore, the torso and the head have the same outline, when viewed horizontally from any direction, and hence it makes no difference which side faces forward—that is to say, it makes no difference which side of the head is made to represent the face of the figure. Consequently, it is optional which side of the torso and head is used for the front. Of course, after the arms and the legs are pivoted on the torso, the side of the torso and head facing forward becomes the front of the figure. But, very obviously, after the torso and head are made as shown, it is then immaterial which side is used for the front of the figure, and any side thereof, before the arms and legs are attached, may be painted or otherwise treated to represent the face of the figure. Thus the cylindrical torso and the spherical head are specifically of considerable value and advantage, as this formation not only gives the toy a unique appearance, but also simplifies the manufacture of toys of this kind. And, in addition, the cylindrical torso and the spherical head are not easily broken, if at all, and the toy will stand considerable rough usuage without being broken.

It is obvious, of course, that the elements 17 and 19 not only simulate a propelling device, but also simulate a specific kind of propelling device, namely one for communicating hand power to one or more of the wheels of the vehicle, as the latter is plainly of the kind which has driving wheel means for the propulsion thereof. Therefore, when the toy is moved forward along the floor, the toy figure has the appearance of manually communicating driving power to one or more of the wheels of the vehicle, and has the appearance of propelling the vehicle in this particular manner.

What I claim as my invention is—

1. In a toy having simulated driving wheel propelling means operated by a toy figure, a support provided with wheels to travel along the floor, a toy figure mounted in riding position on said support and having pivotally connected portions including a rocking body and pivoted arms actuated thereby, wheel operated means to cause motion of said pivotally connected portions of the figure by actuation of said body, and means to simulate a propelling device for operating one or more of said wheels, mounted on the wheeled support and connected to said arms, whereby said device is actuated by said arms, by motion communicated thereto from said body of the figure, so that the figure actually operates said simulated propelling device and thereby appears to be propelling the toy by hand power communicated to one or more of said wheels, when the toy is moved forward along the floor, said support being a flat member, said figure comprising legs fixed on said support, said body being pivoted on said legs, with said arms pivoted on said body, and said device comprising a link connecting said arms to said support, said wheel operated means comprising a crank shaft and a pitman connected to the lower end of said body, whereby the body is rocked on its pivot by the rotation of said crank shaft, thereby to cause said arms to vibrate said link to simulate propelling means.

2. In a toy having simulated driving wheel propelling means operated by a toy figure, a support provided with wheels to travel along the floor, a toy figure mounted in riding position on said support and having pivotally connected portions including a rocking body and pivoted arms actuated thereby, wheel operated means to cause motion of said pivotally connected portions of the figure by actuation of said body, and means to simulate a propelling device for operating one or more of said wheels, mounted on the wheeled support and connected to said arms, whereby said device is actuated by said arms, by motion communicated thereto from said body of the figure, so that the figure actually operates said simulated propelling device and thereby appears to be propelling the toy by hand power communicated to one or more of said wheels, when the toy is moved forward along the floor, comprising a transverse bar forming a spacer between the hands of said arms, so that the arms are in wide apart planes, legs in said planes, an upright member forming said device and extending downward from said spacer to said support, and a pivot for the lower end of said device, said bar and member forming said device.

CLARENCE A. WETZELL.

wise on the top of said support. As the body 8 is round, and therefore of similar thickness, space is afforded between the arms 14 for the transverse bar 17, which latter simulates the upper cross-piece of an ordinary handle, so that the elements 17 and 19 simulate more effectively the ordinary propelling device of a vehicle. The invention contemplates, therefore, broadly, a simulated propelling device which is actually operated by the toy figure, and which is very obviously so operated, thereby to more nearly approximate the actual conditions of propulsion by the person sitting on a vehicle and actually driving the vehicle by means of a hand lever provided for that purpose.

As another advantage of the specific construction of the toy figure, as shown and described, it will be seen that the torso 8 is cylindrical, while the head 9 is spherical, whereby these parts can be very easily manufactured. Furthermore, the torso and the head have the same outline, when viewed horizontally from any direction, and hence it makes no difference which side faces forward—that is to say, it makes no difference which side of the head is made to represent the face of the figure. Consequently, it is optional which side of the torso and head is used for the front. Of course, after the arms and the legs are pivoted on the torso, the side of the torso and head facing forward becomes the front of the figure. But, very obviously, after the torso and head are made as shown, it is then immaterial which side is used for the front of the figure, and any side thereof, before the arms and legs are attached, may be painted or otherwise treated to represent the face of the figure. Thus the cylindrical torso and the spherical head are specifically of considerable value and advantage, as this formation not only gives the toy a unique appearance, but also simplifies the manufacture of toys of this kind. And, in addition, the cylindrical torso and the spherical head are not easily broken, if at all, and the toy will stand considerable rough usuage without being broken.

It is obvious, of course, that the elements 17 and 19 not only simulate a propelling device, but also simulate a specific kind of propelling device, namely one for communicating hand power to one or more of the wheels of the vehicle, as the latter is plainly of the kind which has driving wheel means for the propulsion thereof. Therefore, when the toy is moved forward along the floor, the toy figure has the appearance of manually communicating driving power to one or more of the wheels of the vehicle, and has the appearance of propelling the vehicle in this particular manner.

What I claim as my invention is—

1. In a toy having simulated driving wheel propelling means operated by a toy figure, a support provided with wheels to travel along the floor, a toy figure mounted in riding position on said support and having pivotally connected portions including a rocking body and pivoted arms actuated thereby, wheel operated means to cause motion of said pivotally connected portions of the figure by actuation of said body, and means to simulate a propelling device for operating one or more of said wheels, mounted on the wheeled support and connected to said arms, whereby said device is actuated by said arms, by motion communicated thereto from said body of the figure, so that the figure actually operates said simulated propelling device and thereby appears to be propelling the toy by hand power communicated to one or more of said wheels, when the toy is moved forward along the floor, said support being a flat member, said figure comprising legs fixed on said support, said body being pivoted on said legs, with said arms pivoted on said body, and said device comprising a link connecting said arms to said support, said wheel operated means comprising a crank shaft and a pitman connected to the lower end of said body, whereby the body is rocked on its pivot by the rotation of said crank shaft, thereby to cause said arms to vibrate said link to simulate propelling means.

2. In a toy having simulated driving wheel propelling means operated by a toy figure, a support provided with wheels to travel along the floor, a toy figure mounted in riding position on said support and having pivotally connected portions including a rocking body and pivoted arms actuated thereby, wheel operated means to cause motion of said pivotally connected portions of the figure by actuation of said body, and means to simulate a propelling device for operating one or more of said wheels, mounted on the wheeled support and connected to said arms, whereby said device is actuated by said arms, by motion communicated thereto from said body of the figure, so that the figure actually operates said simulated propelling device and thereby appears to be propelling the toy by hand power communicated to one or more of said wheels, when the toy is moved forward along the floor, comprising a transverse bar forming a spacer between the hands of said arms, so that the arms are in wide apart planes, legs in said planes, an upright member forming said device and extending downward from said spacer to said support, and a pivot for the lower end of said device, said bar and member forming said device.

CLARENCE A. WETZELL.

June 8, 1926.

C. A. WETZELL

1,587,884

MECHANICAL TOY

Filed April 23, 1923

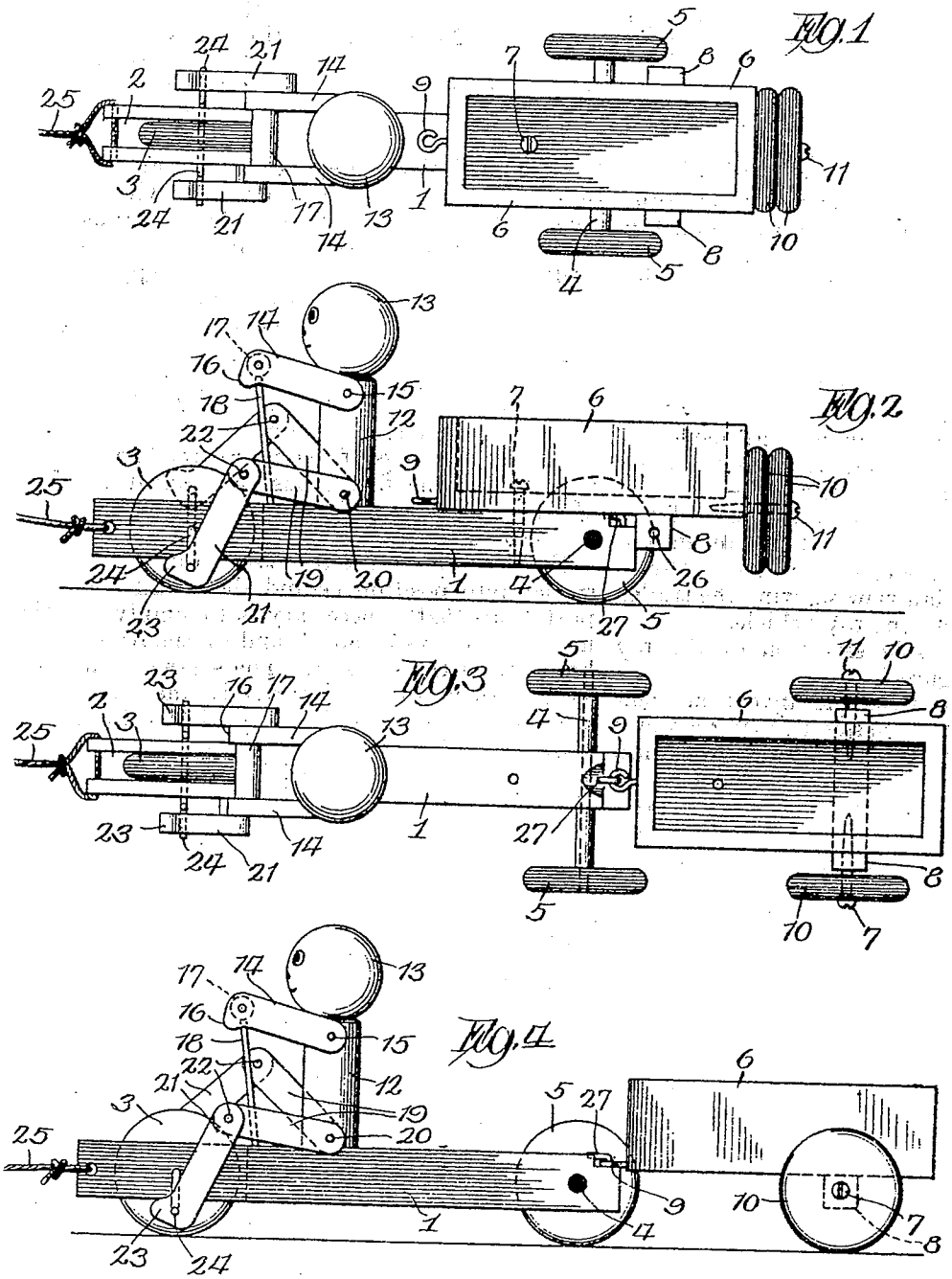

Inventor:
Clarence A. Wetzell
by Arthur H. Durand
Atty.

Patented June 8, 1926. 1,587,884

UNITED STATES PATENT OFFICE.

CLARENCE A. WETZELL, OF STERLING, ILLINOIS.

MECHANICAL TOY.

Application filed April 23, 1923. Serial No. 633,917.

This invention relates to mechanical toys of the kind which are adapted to be propelled or moved along the floor to produce the desired mechanical effect.

Generally stated, the object of the invention is to provide a simple and comparatively inexpensive mechanical toy having a figure thereon which appears to be propelling the toy when it is drawn along the floor.

It is also an object to provide certain details and features of construction and combinations tending to increase the general efficiency and the desirability of a mechanical toy of this particular character.

To the foregoing and other useful ends the invention consists in matters hereinafter set forth and claimed and shown in the accompanying drawings in which—

Figure 1 is a plan of a mechanical toy embodying the principles of the invention.

Figure 2 is a side elevation of said toy.

Figure 3 is a plan view showing the trailer in position behind the toy vehicle.

Figure 4 is a side elevation of the toy as shown in Figure 3.

As thus illustrated, the invention comprises a support or chassis 1 having a slot 2 at the front end thereof for the single wheel 3, and having its rear end provided with an axle 4 carried by the wheels 5, these wheels being of any suitable character. As shown in Figures 1 and 2, the box body 6, which may form the trailer, as hereinafter explained, is secured to the support 1 by a single screw 7, and has its under side provided with a transverse bolster 8 which engages the rear of the support 1 to help position the box on the support. The front end of the box or body 6 has a screw eye 9 inserted therein. The rear end of said box has a couple of spare wheels 10 held in place thereon by a single screw 11, in the manner shown.

The forward portion of the toy has a fixed cylindric portion 12 which forms the body or torso of the toy figure. The upper end of the cylindric body 12 has a round head 13, and is provided with outstretched arms 14 pivoted on the body at 15, the hands 16 of the arms having a spacer 17 between them. A wire 18 extends downward from the spacer 17 to the support 1, to hold the arms in raised and outstretched position. The two legs of the figure are articulated at the knees, and each leg comprises the section 19 which is pivoted on the side of the body 12 at 20, and the section 21 which is pivoted on the section 19 at 22, the feet 23 being disposed at each side of the forward portion of the support 1 of the toy, so that the legs are at opposite sides of the slot 2 of the projecting front end portion of the body-like support. It will be seen that the single wheel 3 has a crank axle 24, the two cranks being disposed oppositely, so that when one crank is up the other is down. These two cranks are engaged by the feet 23 of the toy figure, so that when one foot is down the other is up. A string 25 may be attached to the front end of the toy, ahead of the front wheels, to propel it along the floor. This operates the articulated legs of the figure, and the effect is that the figure has the appearance of propelling the toy, just as a boy riding a velocipede.

Now to change the toy, and to bring the trailer into position behind the wheel support 1, all that is necessary is to simply remove the screws 7 and 11, and to remove the box 6 from the support. The screws 7 and 11 are then inserted through the spare wheels 10 and into the screw holes 26 in the ends of the bolster 8, as shown in Figures 3 and 4, so that the two wheels are thus secured in place to support the box 6 on the floor. Then the screw eye 9 is coupled to the hook 27 on the rear end of the support 1, as shown in Figures 3 and 4, and the toy is then ready for operation with the trailer in position behind. Thus the two screws 7 and 11 serve the double function of holding the box and spare wheels in position, and of forming axles for the spare wheels when the trailer is in position behind the toy.

It will be understood that the parts can all be made of wood, or other suitable material, except the cranks 24 and the screws and other portions which can be made of wire or other metal. The toy is easily convertible into a trailer, as shown, and is easily restored to the condition shown in Figures 1 and 2, in a manner that will be readily understood.

With the exception of the screws 7 and 11 it will be seen that the instrumentalities for converting the body 6 into a trailer are inoperative while the body is in position on the wheeled support. When the body is in the position shown in Figures 1 and 2, the screw 7 functions to hold the body in

place, and the screw 11 functions to support the two wheels 10 on the rear end of the body. The connecting means 9 on the front end of the body are inoperative, when the body is fastened on the wheeled support, and at such time the engaging means 27 is also inoperative, and in this condition of the toy the wheels 10 are inoperative and are merely carried by the body as spare wheels.

Of course, the toy may be used without removing the box from the body 1 which is horizontal and which forms the chassis of the vehicle, and in that event the toy figure will appear to be propelling the vehicle with said box 6 in position to carry a load of sand or the like therein and in rear of the figure, which latter has the torso 12 thereof in the plane of the box, and has the pivots 20 disposed in such position that the knees of the legs are always above the top of the body 1 forming the chassis of the vehicle, in the manner shown and described. Thus the toy has the appearance of a truck for commercial purposes, for carrying a load of sand or other materials in the box thereof, and when the toy is pulled along the floor the little figure in front has the appearance of furnishing the power for propelling the vehicle with the box in the rear thereof in which a load of sand or other materials can be carried.

Of course, the toy can be used either with or without the box 6, as the latter can be left off, if so desired, and the toy can be pulled along the floor by the pull connection 25 without having the box in position in rear of the figure, if it is desired to use the toy without the box or load carrier, but in either case the figure has the appearance of both propelling and steering the figure.

What I claim as my invention is—

1. In a toy, the combination of (1) a wheeled support, (2) a body removably secured thereon, detachable therefrom to form a trailer therefor, and (3) instrumentalities including means to form a draft connection and means whereby to support the body on the floor, carried by the toy and adapted for converting said body into a trailer for said toy, when the body is removed from the wheeled support, so that the one and the same body can serve either as a carrier on the wheeled support, or as a trailer behind.

2. A structure as specified in claim 1, said instrumentalities comprising connecting means for the front end of the body, means under the body and on the support to engage said connecting means, forming said draft connection, a couple of spare wheels forming part of said means to support the body on the floor, a screw for mounting said spare wheels on the rear end of the body, and a screw for attaching the body to the wheeled support, said screws being removable and serving as axles for the spare wheels when the trailer is coupled to the rear end of the wheeled support, whereby the two screws are necessary in either condition of the toy.

3. A structure as specified in claim 1, said instrumentalities comprising a couple of screws inserted in the body, and a couple of spare wheels which utilize said screws as axles when the screws are removed and inserted in position to form the axles of the trailer, forming said means to support the body on the floor, said screws having other positions on the toy when not in use as axles.

4. A structure as specified in claim 1, in combination with means at the front of said support to simulate propelling means for the toy, in either condition thereof, whereby said simulated propelling means are operative with said body either on the wheeled support, or behind as a trailer.

5. A structure as specified in claim 1, in combination with a toy figure sitting on said support in front of said body and adapted to simulate propelling means for the toy, in either condition thereof, whereby said figure is not disturbed by the use of said instrumentalities to form the trailer.

6. A structure as specified in claim 1, said body having a front wheel, and means simulating propelling means for said wheel, operative with said body in either position thereof.

7. A pull toy comprising a horizontal rigid body, two wheels for the rear end of said body, a single wheel in a slot in the front end portion of said body, the axes of all said wheels being in fixed relation to each other, said body and wheels forming the chassis and running gear of a vehicle having a box mounted on the rear end of said body, between the rear wheels, a member forming the torso of a toy figure, said member fixed at its lower end on said body in front of said box, so that the torso is rigid with said vehicle body, a head on said torso, cranks for said front wheel, a crank axle rigid with said cranks and wheel and extending transversely through said body, jointed legs having feet engaging said cranks at opposite sides of said slot, means forming a transverse pivot axis in the base of said torso, for said legs, so that the legs are spaced apart by the base of said torso, arms for said torso, and means attached to the forward end of said body for pulling said toy along the floor to cause said cranks to actuate said legs, whereby the toy figure appears to be propelling the vehicle with said box in position to carry a load in rear thereof, the feet being movable up and down at opposite sides of the front end portion of the body.

8. A structure as specified in claim 7, the top of said body being level, so that the

box and the torso are in the same plane, so that the knees of said legs are above the top of said body, the attachment of the torso to the body being independent of the pivots for the legs, so that with the legs taken off the torso would remain rigidly in place.

9. A structure as specified in claim 7, comprising an upright member fixed on said body and provided at its upper end with a cross piece serving as a support for and spacer between the hands of said arms, said body having a slot in front of said upright member for said front wheel.

10. A pull toy comprising a horizontal body, two wheels for the rear end of said body, a single wheel disposed in the front end portion of said body, so that the front end extends forward of said front wheel, said body and wheels forming the chassis and running gear of a vehicle, the axes of said wheels being in fixed relation to each other, a rigid member forming the torso of a toy figure fixed at its lower end on said body, so that the torso is rigid with said vehicle body, a head on said torso, a crank axle extending through the front end portion of said body and having cranks for rotating said front wheel, jointed legs having feet engaging said cranks, means forming a transverse pivot axis in the base of said torso, for said legs, so that the legs are spaced apart by the base of said torso, arms for said torso, and means connected to said front end ahead of said front wheel for pulling said toy along the floor to cause said cranks to actuate said legs, whereby the toy figure appears to be propelling the vehicle, the feet being movable up and down at opposite sides of the front end portion of the body.

11. A structure as specified in claim 10, in combination with a crosspiece serving as a spacer between the hands of said arms and an upright member rigid with said body and supporting said crosspiece, whereby the figure has the appearance of both propelling and steering the toy.

12. A structure as specified in claim 10, the lower sections of said legs being disposed at opposite sides of said body, and the upper sections being pivoted on the side of said torso so that the knees of the legs are higher than the top of the body, and higher than the pivot of the legs on the lower end of the torso, and means extending upward between the knees to support said arms in position, whereby the figure has the appearance of both propelling and steering the vehicle.

13. In a toy, the combination of (1) a wheeled support, (2) a body removably secured thereon, and (3) instrumentalities carried by the toy and adapted by readjustment thereof for converting said body into a trailer for said toy, when the body is removed from the wheeled support, so that the one and the same body can serve either as a carrier on the wheeled support, or as a trailer behind, said instrumentalities comprising connecting means for the front end of the body, means under the body and on the support to engage said connecting means, a couple of spare wheels, a screw for mounting said spare wheels on the rear end of the body, and a screw for attaching the body to the wheeled support, said screws being removable and serving as axles for the spare wheels when the trailer is coupled to the rear end of the wheeled support, whereby the two screws are necessary in either condition of the toy.

14. In a toy, the combination of (1) a wheeled support, (2) a body removably secured thereon, and (3) instrumentalities carried by the toy and adapted by readjustment thereof for converting said body into a trailer for said toy, when the body is removed from the wheeled support, so that the one and the same body can serve either as a carrier on the wheeled support, or as a trailer behind, said instrumentalities comprising a couple of screws inserted in the body, and a couple of spare wheels which utilize said screws as axles when the screws are removed and inserted in position to form the axles of the trailer, said screws having other positions on the toy when not in use as axles.

CLARENCE A. WETZELL.

01587884 U 350

01587884 U

J. SNEED
5171 TIMBER RACE COURSE

HOLLYWOOD SC 29449

54319100595LETR
KN 3531

June 8, 1926. 1,587,885

C. A. WETZELL

MECHANICAL TOY

Filed Sept. 4, 1925

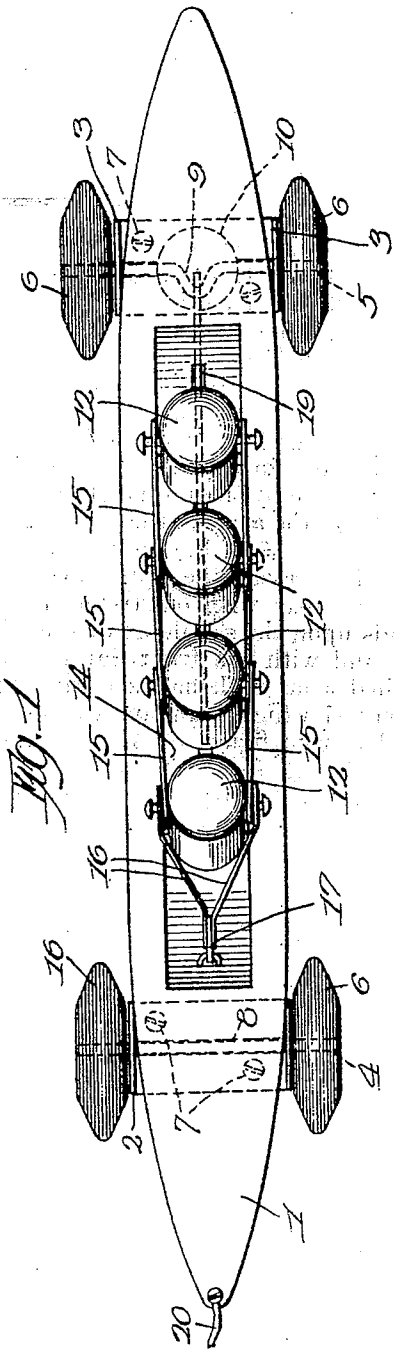

Fig. 1

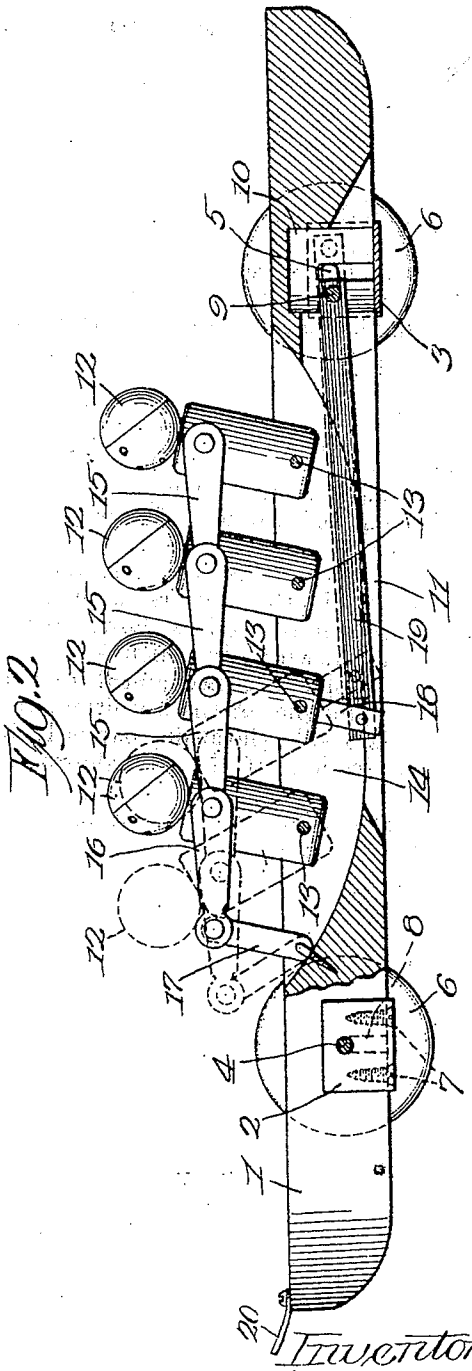

Fig. 2

Inventor
Clarence A. Wetzell
By Arthur F. Durand Atty.

actuate one of said figures, thereby to transmit motion through arms from one figure to another.

2. A structure as specified in claim 1, each figure body being cylindrical, with a groove in said boat to receive the lower ends of the bodies, and the heads being spherical, while the pivoted arms are flat and overlapping.

3. A structure as specified in claim 1, said arms being overlapping, and at least one figure having a shoulder pivot passing through the arms thereof and through the ends of the arms of the figure behind.

Specification signed this 28th day Aug. 1925.

CLARENCE A. WETZELL.

Patented June 8, 1926.

1,587,885

UNITED STATES PATENT OFFICE.

CLARENCE A. WETZELL, OF STERLING, ILLINOIS.

MECHANICAL TOY.

Application filed September 4, 1925. Serial No. 54,411.

This invention relates to mechanical toys, and more particularly to those which have one or more supporting wheels, and which have wheel operated toy figures or means of some kind which are actuated, when the toy is pulled along the floor.

Generally stated, the object of the invention is to provide a novel and improved toy of this general character, having instrumentalities to simulate a crew rowing a boat, the toy figures representing the crew being movable back and forth in unison when the toy is pulled along the floor.

It is also an object to provide certain details and features of construction tending to increase the general efficiency and desirability of a mechanical toy of this particular character.

To these and other useful ends, the invention consists in the matters hereinafter set forth and claimed, and as shown in the accompanying drawings, in which—

Figure 1 is a plan of a mechanical toy embodying the principles of the invention, and

Figure 2 is a side elevation, partially in longitudinal section, of the toy shown in Figure 1.

As thus illustrated, the invention comprises a base 1 in the form of a racing shell, mounted upon bolsters 2 and 3, having axles 4 and 5, to the end portions of which the wheels 6 are secured. Said bolsters are preferably secured in place by means of screws 7, or other suitable means, in the manner shown. Transverse cuts 8 are preferably made in the base, for the said axles, and inasmuch as the rear axle has a crank 9, the rear portion of the boat is also preferably formed with a round opening 10 in the under side thereof, providing clearance for said crank. A longitudinal slot 11 is also formed in the bottom of the boat.

Each of the toy figures 12 has a round head and a cylindrical torso, and the lower ends of the torsos are mounted on the transverse pins 13 inserted through the sides of the boat, the upper side of the boat having a longitudinal groove or recess 14 in which the lower portions of the little figures are mounted. The toy figures are connected together by the arms 15 pivoted on the sides of the torso, in the manner shown, but the arms 16 of the front figure are pivotally connected to the upper end of a member 17, the lower end of which latter is in turn suitably pivoted on the boat. One figure is provided with a lower extension 18, and a pitman 19 is pivoted on this extension at one end and has its other end in suitable engagement with the crank 9, previously mentioned.

A pull cord 20 can be fastened to either end of the toy, and the toy when pulled along the floor will cause the little figures 12 to rock back and forth on the pins 13, in unison, so that they have the appearance of a crew rowing a boat.

The toy figures have a vibratory back and forth movement, as indicated in dotted lines in Figure 2 of the drawings. As they are all connected together by the arms 15, the figures will move in unison, and the actuation of one figure by the pitman 19 is transmitted through the arms to the other figures.

Thus the arms 15 of the figures are overlapping, and present the appearance of a figure in the rear with outstretched arms, with hands upon the shoulders of the figure in front, and with the front figure having outstretched arms with hands resting upon the element 17 which simulates a propelling device. By front figure, of course, is meant the figure facing forward and nearest the device 17, regardless of which way the toy is pulled along the floor. Thus power is communicated through the body of one figure, and through the arms of this figure to another figure in front, and through the arms of figures in the rear. Any suitable number of figures can be employed, but in any event, motion is transmitted through arms from one figure to another, either through the arms of the one figure, or through the arms of the other figure, as the arms are practically all linked together by pivots which are each common to the arms of two figures.

Without disclaiming anything, and without prejudice to any novelty disclosed, what I claim as my invention is:

1. A rowing crew toy comprising a boat, wheels therefor, a plurality of figures each comprising a body and arms and a head, disposed in a row in said boat, means to pivot the lower end of each body in the boat, means to pivotally connect the arms together, so that a figure in the rear has the appearance of having outstretched arms with hands upon the shoulder of the figure ahead, means to support the arms of the figure in front, and wheel operated means to

Patented June 8, 1926.

1,587,885

UNITED STATES PATENT OFFICE.

CLARENCE A. WETZELL, OF STERLING, ILLINOIS.

MECHANICAL TOY.

Application filed September 4, 1925. Serial No. 54,411.

This invention relates to mechanical toys, and more particularly to those which have one or more supporting wheels, and which have wheel operated toy figures or means of some kind which are actuated, when the toy is pulled along the floor.

Generally stated, the object of the invention is to provide a novel and improved toy of this general character, having instrumentalities to simulate a crew rowing a boat, the toy figures representing the crew being movable back and forth in unison when the toy is pulled along the floor.

It is also an object to provide certain details and features of construction tending to increase the general efficiency and desirability of a mechanical toy of this particular character.

To these and other useful ends, the invention consists in the matters hereinafter set forth and claimed, and as shown in the accompanying drawings, in which—

Figure 1 is a plan of a mechanical toy embodying the principles of the invention, and Figure 2 is a side elevation, partially in longitudinal section, of the toy shown in Figure 1.

As thus illustrated, the invention comprises a base 1 in the form of a racing shell, mounted upon bolsters 2 and 3, having axles 4 and 5, to the end portions of which the wheels 6 are secured. Said bolsters are preferably secured in place by means of screws 7, or other suitable means, in the manner shown. Transverse cuts 8 are preferably made in the base, for the said axles, and inasmuch as the rear axle has a crank 9, the rear portion of the boat is also preferably formed with a round opening 10 in the under side thereof, providing clearance for said crank. A longitudinal slot 11 is also formed in the bottom of the boat.

Each of the toy figures 12 has a round head and a cylindrical torso, and the lower ends of the torsos are mounted on the transverse pins 13 inserted through the sides of the boat, the upper side of the boat having a longitudinal groove or recess 14 in which the lower portions of the little figures are mounted. The toy figures are connected together by the arms 15 pivoted on the sides of the torso, in the manner shown, but the arms 16 of the front figure are pivotally connected to the upper end of a member 17, the lower end of which latter is in turn suitably pivoted on the boat. One figure is provided with a lower extension 18, and a pitman 19 is pivoted on this extension at one end and has its other end in suitable engagement with the crank 9, previously mentioned.

A pull cord 20 can be fastened to either end of the toy, and the toy when pulled along the floor will cause the little figures 12 to rock back and forth on the pins 13, in unison, so that they have the appearance of a crew rowing a boat.

The toy figures have a vibratory back and forth movement, as indicated in dotted lines in Figure 2 of the drawings. As they are all connected together by the arms 15, the figures will move in unison, and the actuation of one figure by the pitman 19 is transmitted through the arms to the other figures.

Thus the arms 15 of the figures are overlapping, and present the appearance of a figure in the rear with outstretched arms, with hands upon the shoulders of the figure in front, and with the front figure having outstretched arms with hands resting upon the element 17 which simulates a propelling device. By front figure, of course, is meant the figure facing forward and nearest the device 17, regardless of which way the toy is pulled along the floor. Thus power is communicated through the body of one figure, and through the arms of this figure to another figure in front, and through the arms of figures in the rear. Any suitable number of figures can be employed, but in any event, motion is transmitted through arms from one figure to another, either through the arms of the one figure, or through the arms of the other figure, as the arms are practically all linked together by pivots which are each common to the arms of two figures.

Without disclaiming anything, and without prejudice to any novelty disclosed, what I claim as my invention is:

1. A rowing crew toy comprising a boat, wheels therefor, a plurality of figures each comprising a body and arms and a head, disposed in a row in said boat, means to pivot the lower end of each body in the boat, means to pivotally connect the arms together, so that a figure in the rear has the appearance of having outstretched arms with hands upon the shoulder of the figure ahead, means to support the arms of the figure in front, and wheel operated means to

Oct. 12, 1926. 1,602,561

C. A. WETZELL

TOY BIRD OR OTHER CREATURE

Filed Oct. 3, 1924

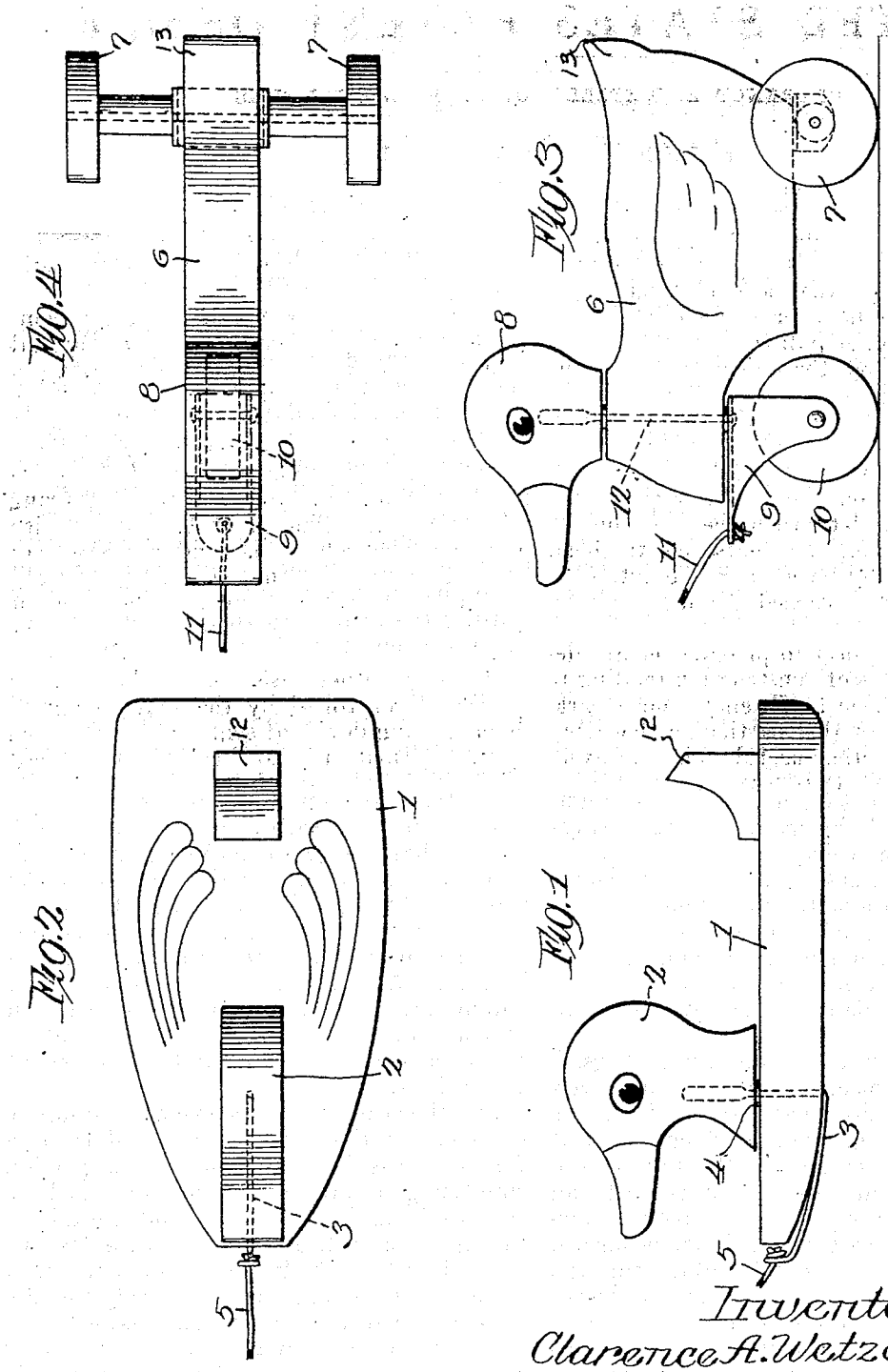

Inventor:
Clarence A. Wetzell
By Arthur H. Durand
Atty.

Patented Oct. 12, 1926.

1,602,561

UNITED STATES PATENT OFFICE.

CLARENCE A. WETZELL, OF STERLING, ILLINOIS.

TOY BIRD OR OTHER CREATURE.

Application filed October 3, 1924. Serial No. 741,322.

This invention relates to toys that represent birds or other creatures, and more particularly to those that are adapted to be drawn along the floor, or even on the water, by a string or other pull connection.

Generally stated, the object of the invention is to provide a novel construction and arrangement whereby a toy of this kind has a head, such as the head of a bird or any animal or creature, which is controlled by the pull connection, and which will turn to the right or the left when the pull connection is moved to either side, so that the head will automatically face in the direction in which the toy is turned from its course ahead.

It is also an object to provide certain details and features of construction tending to increase the general efficiency and desirability of a toy of this particular character.

To these and other useful ends the invention consists in matters hereinafter set forth and claimed and shown in the accompanying drawings in which:—

Fig. 1 is a side elevation of a toy embodying the principles of the invention.

Fig. 2 is a plan of said toy.

Fig. 3 is a view similar to Fig. 1, showing a different form of the invention.

Fig. 4 is a plan of the toy shown in Fig. 3.

As thus illustrated, referring to Figs. 1 and 2, the invention comprises a flat body 1 of wood or other material which can be pulled along the ground, or which will float on the water. As shown, the toy is supposed to represent a duck or other bird, and has a head 2 swiveled to turn about a vertically disposed axis, which latter is formed by a wire 3 bent to extend upward through the body 1 and fixed in the head. A washer 4 is preferably interposed between the head and the body, so that the head will turn easily. The wire 3 constitutes a steering device or means, as it is extended forward and upward in front of the body 1, and has a pull string 5 attached thereto, so that the toy can be pulled along the ground or on the water. The head 2 turns to the right or the left, of course, when the pull string is swung to either side, so that the head turns in the direction in which the toy changes its course of travel, in a natural or characteristic manner

As shown in Figs. 3 and 4, the toy comprises a body 6 of wood or other material mounted on rear wheels 7 and having a swiveled head 8 similar to the one previously described. In this case, however, the front of the toy is mounted upon a truck 9 having a single wheel 10, forming a front steering device or means to which the pull string 11 is attached. The pivot 12 is rigid with the truck frame 9 and is rigid with the head 8, so that it turns in the body 6, thereby causing the head 8 to turn to the right or the left when the pull string is swung to one side.

Thus, in either case, the toy has a head which is controlled by the pull string, or by a steering device of some kind, and which turns automatically to the right or the left when the direction of travel of the toy is changed, in the manner shown and described. The toy has the appearance of being a duck or other bird, as either the body 1 or the body 6 is formed of a flat block of wood in simulation of a duck, but it is obvious that a toy having a head automatically controlled by a pull string, so that the head will turn automatically to the right or the left, can be made to represent any suitable creature or object, without departing from the spirit of the invention.

In either case, there are means to simulate the body of the live creature, and in both forms of the invention there is a portion simulating a tail for the creature, such as the tail 12 in Figs. 1 and 2, and the tail 13 in Figs. 3 and 4, and in each case the tail is rigid with the body, so that only the head of the creature is movable relatively thereto.

What I claim as my invention is:—

A toy provided with a flat wood block forming a body, in simulation of the body of the creature represented, a head swiveled thereon to turn to the right or left, a pull connection by which to pull the toy along the floor, and draft means on the lower end of the swivel and controlled by said pull connection to turn the head in either direction, the front end portion of the body be-

ing interposed between said head and said draft means and forming the bearing for the swivel, said draft means extending forward under the front end of said body, the front end portion of the body being undercut to accommodate said draft device, and disposed a distance below said head, said pull connection being attached to the front end of said draft means, and the rear end of said body having a portion representing the tail of said creature.

Specification signed this 26th day of Sept. 1924.

CLARENCE A. WETZELL.

01602561 U 350

01602561 U

J. SNEED
5171 TIMBER RACE COURSE

HOLLYWOOD SC 29449

54319100595LETR
KN 3531

01602561 U 350

01602561 U

J. SNEED
5171 TIMBER RACE COURSE

HOLLYWOOD SC 29449

54319100595LETR
KN 3531

Patented Oct. 12, 1926. 1,602,561

UNITED STATES PATENT OFFICE.

CLARENCE A. WETZELL, OF STERLING, ILLINOIS.

TOY BIRD OR OTHER CREATURE.

Application filed October 3, 1924. Serial No. 741,322.

This invention relates to toys that represent birds or other creatures, and more particularly to those that are adapted to be drawn along the floor, or even on the water, by a string or other pull connection.

Generally stated, the object of the invention is to provide a novel construction and arrangement whereby a toy of this kind has a head, such as the head of a bird or any animal or creature, which is controlled by the pull connection, and which will turn to the right or the left when the pull connection is moved to either side, so that the head will automatically face in the direction in which the toy is turned from its course ahead.

It is also an object to provide certain details and features of construction tending to increase the general efficiency and desirability of a toy of this particular character.

To these and other useful ends the invention consists in matters hereinafter set forth and claimed and shown in the accompanying drawings in which:—

Fig. 1 is a side elevation of a toy embodying the principles of the invention.

Fig. 2 is a plan of said toy.

Fig. 3 is a view similar to Fig. 1, showing a different form of the invention.

Fig. 4 is a plan of the toy shown in Fig. 3.

As thus illustrated, referring to Figs. 1 and 2, the invention comprises a flat body 1 of wood or other material which can be pulled along the ground, or which will float on the water. As shown, the toy is supposed to represent a duck or other bird, and has a head 2 swiveled to turn about a vertically disposed axis, which latter is formed by a wire 3 bent to extend upward through the body 1 and fixed in the head. A washer 4 is preferably interposed between the head and the body, so that the head will turn easily. The wire 3 constitutes a steering device or means, as it is extended forward and upward in front of the body 1, and has a pull string 5 attached thereto, so that the toy can be pulled along the ground or on the water. The head 2 turns to the right or the left, of course, when the pull string is swung to either side, so that the head turns in the direction in which the toy changes its course of travel, in a natural or characteristic manner

As shown in Figs. 3 and 4, the toy comprises a body 6 of wood or other material mounted on rear wheels 7 and having a swiveled head 8 similar to the one previously described. In this case, however, the front of the toy is mounted upon a truck 9 having a single wheel 10, forming a front steering device or means to which the pull string 11 is attached. The pivot 12 is rigid with the truck frame 9 and is rigid with the head 8, so that it turns in the body 6, thereby causing the head 8 to turn to the right or the left when the pull string is swung to one side.

Thus, in either case, the toy has a head which is controlled by the pull string, or by a steering device of some kind, and which turns automatically to the right or the left when the direction of travel of the toy is changed, in the manner shown and described. The toy has the appearance of being a duck or other bird, as either the body 1 or the body 6 is formed of a flat block of wood in simulation of a duck, but it is obvious that a toy having a head automatically controlled by a pull string, so that the head will turn automatically to the right or the left, can be made to represent any suitable creature or object, without departing from the spirit of the invention.

In either case, there are means to simulate the body of the live creature, and in both forms of the invention there is a portion simulating a tail for the creature, such as the tail 12 in Figs. 1 and 2, and the tail 13 in Figs. 3 and 4, and in each case the tail is rigid with the body, so that only the head of the creature is movable relatively thereto.

What I claim as my invention is:—

A toy provided with a flat wood block forming a body, in simulation of the body of the creature represented, a head swiveled thereon to turn to the right or left, a pull connection by which to pull the toy along the floor, and draft means on the lower end of the swivel and controlled by said pull connection to turn the head in either direction, the front end portion of the body be-

Nov. 9, 1926. 1,606,460

C. A. WETZELL

TOY AUTOMOBILE AND DRIVER

Filed Oct. 3, 1924

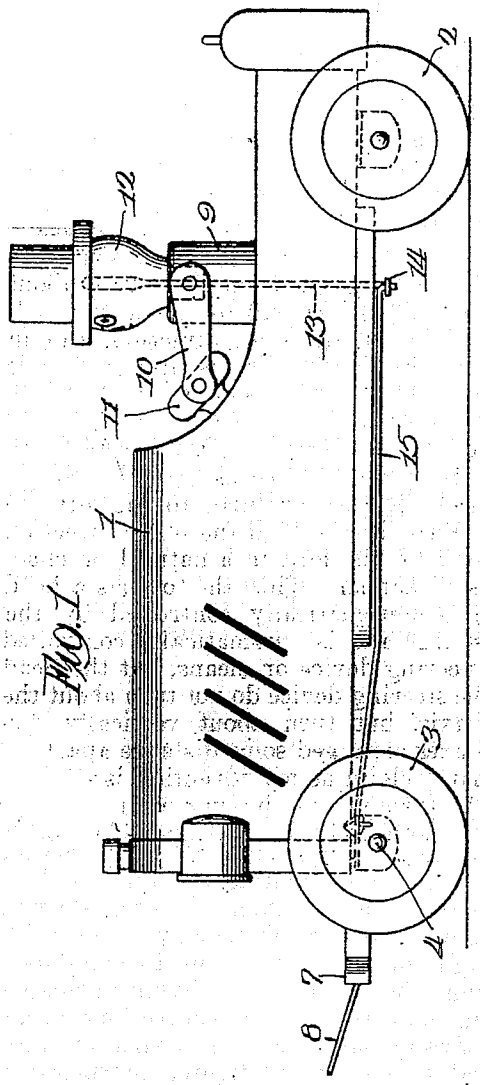

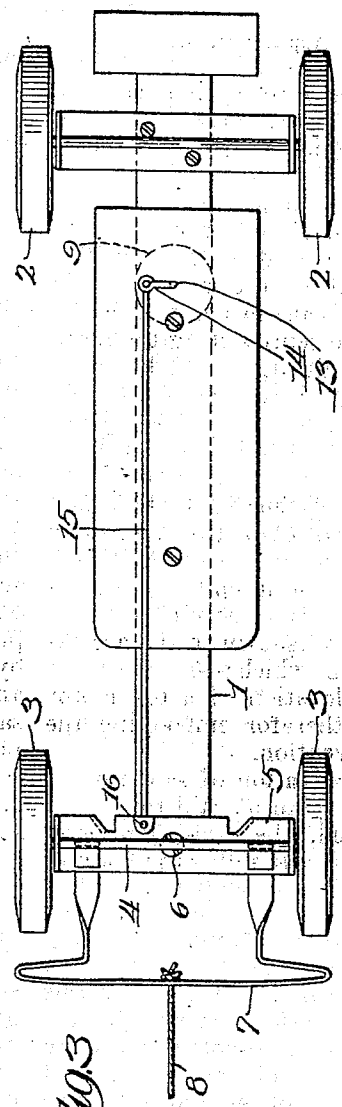

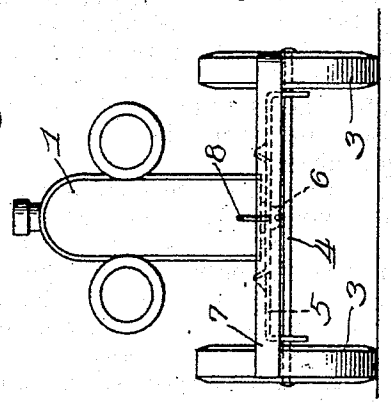

Inventor:
Clarence A. Wetzell
By Arthur H. Durand
Atty.

Patented Nov. 9, 1926.

1,606,460

UNITED STATES PATENT OFFICE.

CLARENCE A. WETZELL, OF STERLING, ILLINOIS.

TOY AUTOMOBILE AND DRIVER.

Application filed October 3, 1924. Serial No. 741,323.

This invention relates to mechanical toys in general, but more particularly to those which represent a vehicle and driver therefor.

Generally stated, the object of the invention is to provide a novel and improved construction whereby the head of the driver is automatically turned to the right or the left, by the steering means in front, whereby the head of the figure representing the driver will face in the direction in which the toy, such as a motor vehicle, is turned from its course, either to the right or the left.

It is also an object to provide certain details and features of construction tending to increase the general efficiency and the desirability of a mechanical toy of this particular character.

To these and other useful ends, the invention consists in matters hereinafter set forth and claimed, and shown in the accompanying drawings in which:—

Fig. 1 is a side elevation of a toy motor vehicle and driver therefor embodying the principles of the invention.

Fig. 2 is a front elevation of said toy.

Fig. 3 is a bottom plan of said toy.

As thus illustrated, the invention comprises a body 1 which represents the body of a racing car, which is provided with rear wheels 2 and front wheels 3, and is in various ways made to have the appearance of a little racing motor car. The front wheels are mounted on the axle 4 carried by the bolster 5, which latter is pivoted at 6 upon the under side of the front end portion of the body, so that the bolster and axle turn or swing about a vertically disposed pivot. The bumper 7 is attached to said bolster, and a pull string 8 is attached to said bumper.

The driver comprises a body 9 forming the torso of the figure, having arms 10 which reach out and engage the simulated steering wheel 11 of the little racing car. The driver has a head 12 which is swiveled to turn about a vertically disposed axis, a rod or wire 13 being extended upwardly through the body 1 for this purpose, and being fixed in the head 12, whereby oscillation of this rod or wire in the body 1 and torso 9 will turn the head to the right or the left. The lower end of the rod or wire 13 is bent to form a crank 14, and the end of this crank is connected by a rod 15 with the pivot 16 on the bolster 5 previously mentioned. With this arrangement, and the with pivotal point 16 located a distance to one side of the pivot 6, the movement of the bolster 5 about its pivot 6 will cause the rod 15 to oscillate the rod or wire 13, one way or the other, thereby to turn the head 12 to the right or the left.

Thus, when the pull string 8 is swung to one side, causing the bolster 5 to turn about its pivot 6, the head 12 of the driver will turn or face in the same direction, and in this way the driver has the appearance of looking to the right or the left, whenever the direction of travel of the little racing car is changed. For example, if the car turns to the right, the driver turns his head to the right, and if the car turns to the left the driver turns his head in the other direction and looks to the left, in a natural or characteristic manner. Thus the toy has a head which is automatically controlled by the pull string, and is automatically controlled by a steering device or means, but the head and the steering device do not turn about the same axis, but turn about vertically disposed axes arranged some distance apart.

What I claim as my invention is:—

1. A steerable toy, having means to simulate a motor vehicle, a controllable motion figure thereon, simulating the animate driver thereof, said vehicle having steering means whereby the vehicle may be steered to the right or the left, means to simulate a steering wheel, said figure having arms engaging said wheel, and controlling means operative by said steering means to automatically control said figure, interposed as connection between said figure and steering means, causing said figure to have movement when the vehicle is turned to the right or the left, and serving to hold the figure against motion when the vehicle is traveling straight ahead.

2. A structure as specified in claim 1, said figure having a fixed body and a swiveled head which turns to the right or the left, automatically, only when said steering means turn to the right or the left, the swivel of said head being connected below with said controlling means.

3. A structure as specified in claim 1, and a pull connection attached to said steering means, whereby said pull connection automatically controls the action of said figure.

4. A structure as specified in claim 1, said steering means comprising a pivoted front axle and wheels, and said figure having a

movable head controlled by said axle, through the medium of said connecting means.

5. A toy automobile, steering means therefor, to steer the toy to the right or the left, means to simulate a controllable driver therefor, constructed to automatically look to the right or the left only when the toy turns in either direction, automatic controlling means for causing such motion of the driver, interposed as connection between the figure and the steering means, serving to prevent any motion thereof when the vehicle is traveling straight ahead, said steering means being movable to the right or the left relatively to the rear portion of the vehicle in which said figure is seated, and means to simulate a steering wheel in front of said driver.

Specification signed this 26th day of Sept. 1924.

CLARENCE A. WETZELL.

movable head controlled by said axle, through the medium of said connecting means.

5. A toy automobile, steering means therefor, to steer the toy to the right or the left, means to simulate a controllable driver therefor, constructed to automatically look to the right or the left only when the toy turns in either direction, automatic controlling means for causing such motion of the driver, interposed as connection between the figure and the steering means, serving to prevent any motion thereof when the vehicle is traveling straight ahead, said steering means being movable to the right or the left relatively to the rear portion of the vehicle in which said figure is seated, and means to simulate a steering wheel in front of said driver.

Specification signed this 26th day of Sept. 1924.

CLARENCE A. WETZELL.